REVISIONS				
ZONE	REV.	DESCRIPTION	DATE	APPROVED

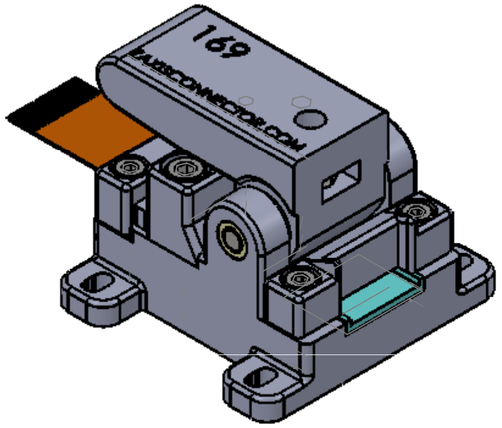

MAXIMUM FLEX WIDTH IS .5mm X 20 TRACES.
TEST EQUIPMENT FLEX LENGTH DEPENDS
ON AVAILABILITY.

4X CLEARANCE FOR
M2 OR 2-56 SHCS

[15]
.591

[1.52]
4X .06

[37.29]
1.47

[33.02]
1.30

[25]
.984

FlexibleTest.com

169

UNIT ID
NUMBER
TO MATCH
ID NUMBER
ON INSERT

[30]
1.181

[36.19]
1.42

[42.69]
1.68

[26.02]
1.02

[8.08]
.32 HEIGHT
OF TEST FLEX
TO BOTTOM OF
UNIT

[27]
R1.06

67°

[6.99]
.28 HEIGHT OF
DUT (UUT) FLEX
TO BOTTOM OF
UNIT

[13.59]
.535 DISTANCE
DUT (UUT) FLEX
ENTERS UNIT FOR
TESTING

NOTE:
FOR THIS UNIT, TRACES ON DUT (UUT) FLEX MUST BE FACING UP.
TRACES ON FLEX GOING TO TEST EQUIPMENT ARE ALSO UP, BUT
CAN FACE DOWN IF A FLIPOVER FLEX IS USED.

www.flexibletest.com

VIEWS ARE GENERATED BY
THIRD ANGLE PROJECTION

PROPRIETARY AND CONFIDENTIAL
THE INFORMATION CONTAINED IN THIS DRAWING IS THE SOLE PROPERTY OF Z-AXIS CONNECTOR CO. ANY REPRODUCTION IN PART OR AS A WHOLE WITHOUT THE WRITTEN PERMISSION OF Z-AXIS CONNECTOR CO. IS PROHIBITED.

NEXT ASSY	USED ON
APPLICATION	

UNLESS OTHERWISE SPECIFIED:
DIMENSIONS ARE IN INCHES
TOLERANCES:
FRACTIONAL ±1/32
ANGULAR: MACH ±1/2° BEND ±
TWO PLACE DECIMAL ±.010
THREE PLACE DECIMAL ±.005
FOUR PLACE DECIMAL ±.0002
INTERPRET GEOMETRIC TOLERANCING PER:
MATERIAL
FINISH
DO NOT SCALE DRAWING

	NAME	DATE
DRAWN	RCK	7/4/14
CHECKED		
ENG APPR.		
MFG APPR.		
Q.A.		

COMMENTS:

Z-AXIS CONNECTOR CO.

TITLE:
Mini Up Small
FFC

SIZE	DWG. NO.	REV
C	MUS-2D-F-A	

SCALE: 2:1 | WEIGHT: | SHEET 1 OF 1